AirStar Nova 700

Exploded View Diagram

(does not include grip block or trigger guard)

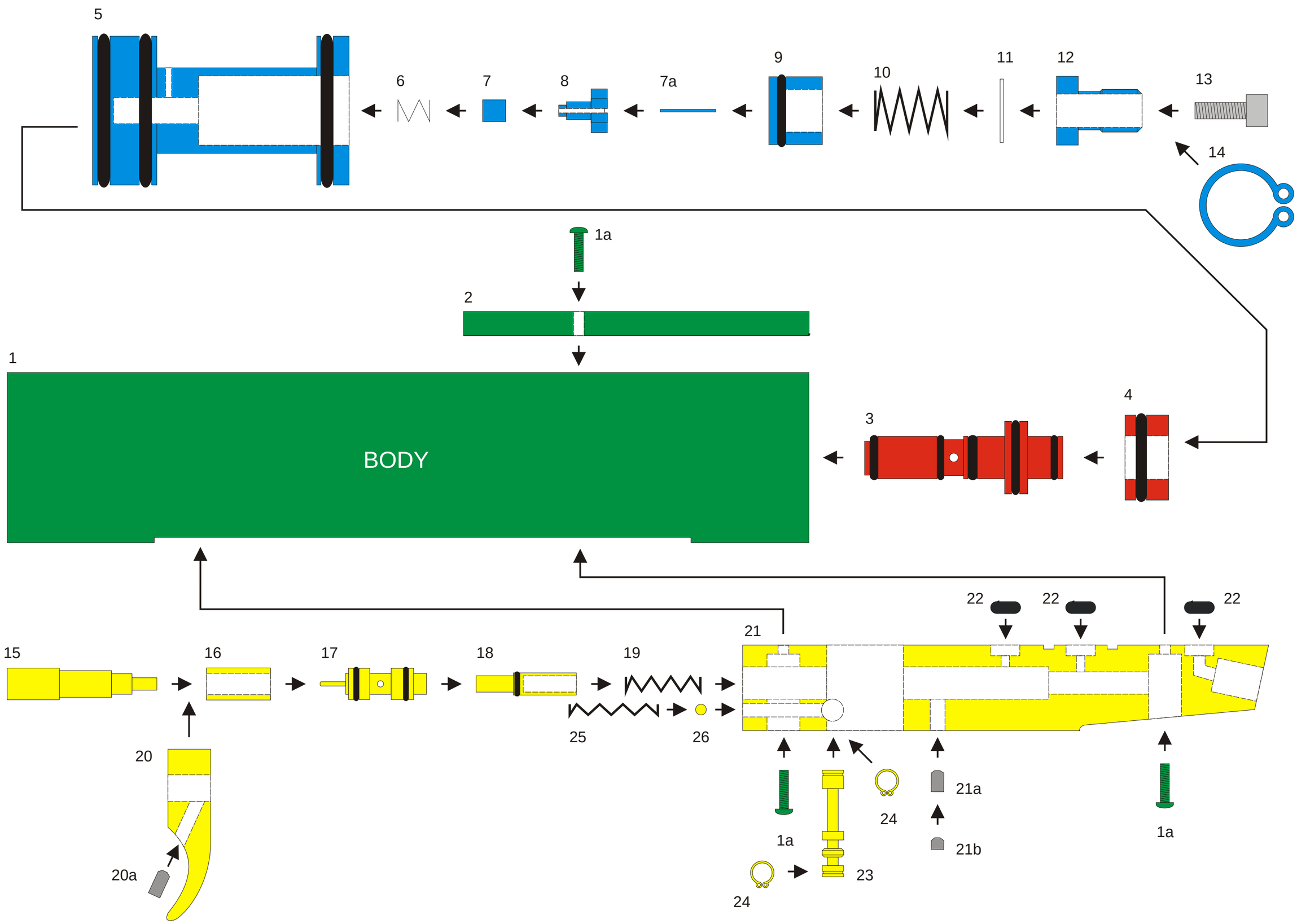

1	Body	7a	Buffer Pin	15	Trigger Rod	21a	Set Screw
1a	Body Screw	8	Brass Seat	16	Trigger Sleeve	21b	Set Screw
2	Site Rail	9	Piston	17	Trigger Switch	22	Frame O-Ring
3	Spool	10	Regulator Spring	18	Spring Guide	23	Safety
4	Spool Cap	11	Velocity Washer	19	Relief Spring	24	Safety Snap Ring
5	Regulator Body	12	Velocity Cap	20	Trigger	25	Safety Spring
6	Buffer Spring	13	Velocity Screw	20a	Trigger Set Screw	26	Safety Bearing
7	Buffer	14	Reg. Snap Ring	21	Trigger Frame		